A Differential-Privacy based Framework for Protecting Privacy in Smart Homes

Mahsa Keshavarz
Mohd Anwar
North Carolina A&T State University

Problem

- Smart appliances in smart homes collect information about user.
- Sharing and obtaining information about a user might cause **privacy violation**.

Sensitive Information

Device	Information	Sensitive/Non-Sensitive
Smart Bed	• Connects with Fitbits, Nest Thermostats. • sensors track heart rate, breathing and movement	Sensitive (PII) Medical Information
Smart Mat	• Body weight and footprint of the user.	Sensitive(PII) Personal Characteristics and Weight
Smart Thermostat	• It has a small wireless sensor that keeps the heat on until it senses that room has warmed up enough • By using its motion sensor it can understand when occupants leave the home or go to sleep.	Sensitive (PII) Geographical Indicators

Differential Privacy (DP)

- Differential privacy is a technique that we can use to remove sensitive information and release non-sensitive ones.

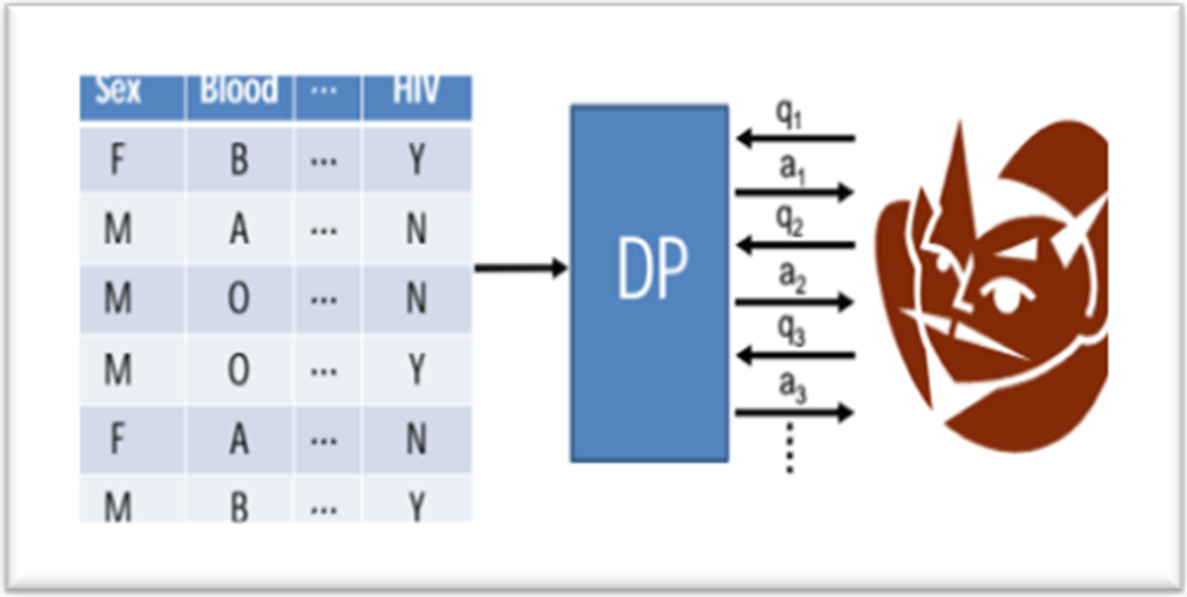

Deferential Privacy

Differential Privacy (DP) Mechanism

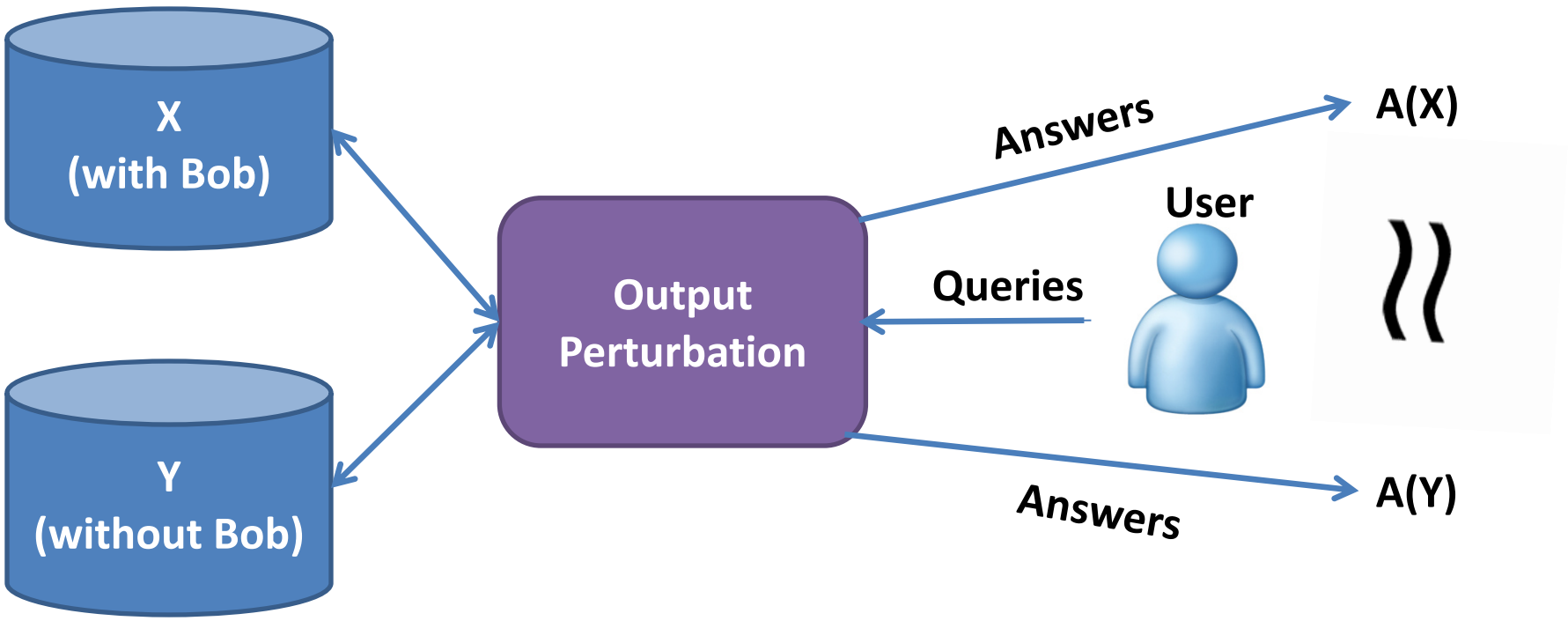
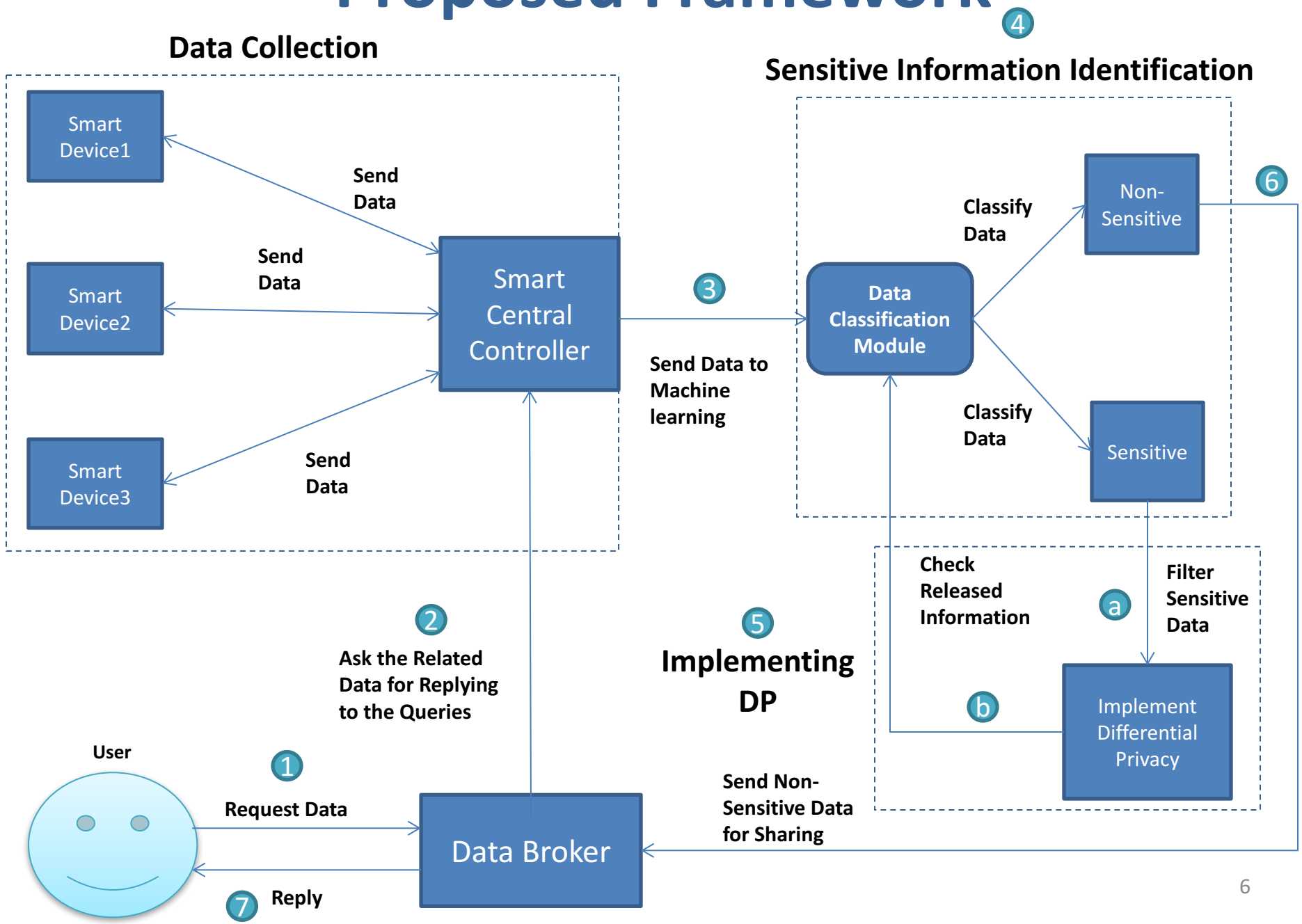
Proposed Framework